

FLI structures

FLI PILE FRAME SUMMARY DOCUMENT

FLI DOCUMENT REFERENCE: 2025/073

Revision	Modification	Date	Prepared By	Checked By
01	First issue	20/06/2025	Jonny Glover	Hamish Norman

CONTENTS

1 FOUR LEG LATTICE TOWER FRAME

4 & 8 Pile Frame to suit FLI ATS1301 and Swann CS5S 2

2 STREETWORKS MONOPOLE FRAME

2.1 Four Pile Frame *(2000/201)* 3

2.2 Three Pile Frame 4

3 FLIDER

3.1 DM3 & DM4 Four Leg Frame 5

3.2 DM3 & DM4 Eight Leg Frame 6

4 RAIL FRAME

5 FLICORN - T3A MICROPILE FRAME

FRAME DRAWING	ORIGINAL FRAME NUMBER	COMPATIBLE TOWER TYPES	FRAME CAPACITY	FRAME WEIGHT	MAXIMUM DEFLECTION	LINK
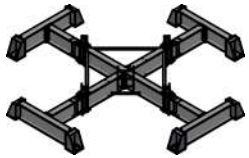	HPF198	FLI ATS1301: • BASE MODULE C • BASE MODULE D • BASE MODULE E	OTM: 2050 kNm SHEAR: 115 kN WEIGHT: 75 kN *MIN PCD: 3.5m* *MAX PCD: 6m*	3350 kg	0.15°	SK4737
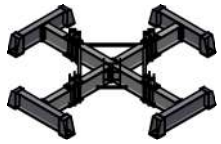	HPF270	• 4 LEGGED LATTICE TOWER (INCL. 30m CS5S)	OTM: 1800 kNm SHEAR: 90 kN WEIGHT: 85 kN *MIN PCD: 3.5m* *MAX PCD: 6m*	3350 kg	0.16°	SK4738
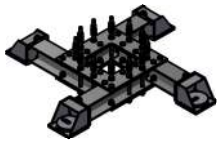	HPF262	• 20m ORION MONOPOLE • 20m APOLLO MONOPOLE • 20m ATLAS MONOPOLE • M-RANGE MONOPOLE	OTM: 215 kNm SHEAR: 16 kN WEIGHT: 37 kN *MIN PCD: 2m* *MAX PCD: 2.8m*	680 kg	0.22°	SK4739
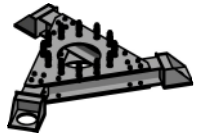	HPF226	• 20m ORION MONOPOLE • 20m APOLLO MONOPOLE • 20m ATLAS MONOPOLE • M-RANGE MONOPOLE	OTM: 100 kNm SHEAR: 8 kN WEIGHT: 28 kN *PILE PCD: 2m*	700 kg	0.16°	SK4740
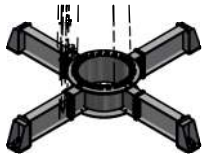	HPF246	• FLI DM4 (UP TO 20m) • FLI DM3 (UP TO 20m)	OTM: 1000 kNm SHEAR: 90 kN WEIGHT: 100 kN *MIN PCD: 2.5m* *MAX PCD: 4.75m*	2130 kg	0.15°	SK4741
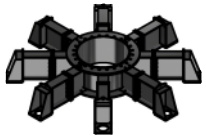	HPF283	• FLI DM4 (UP TO 20m) • FLI DM3 (UP TO 20m)	OTM: 1250 kNm SHEAR: 90 kN WEIGHT: 100 kN *MIN PCD: 2.5m* *MAX PCD: 6m*	3550 kg	0.15°	SK4742
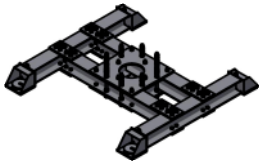	HPF267	• FLI RAIL GANRTY	TBC *2.5m CENTRES*	1920 kg	N/A	SK4743
	HPF243	• FLI T3A (UP TO 40m)	TENSION: 2100 kN COMPRESSION: 2200 kN SHEAR: 270 kN *(VALUES LISTED ABOVE RELATE TO THE INDIVIDUAL LEG FORCES)*	2160 kg	N/A	SK4744

DO NOT SCALE
IF IN DOUBT ASK

THE COPYRIGHT OF DESIGNS, DETAILS AND PROPOSALS CONTAINED OR IMPLIED IN THIS DRAWING ARE VESTED IN FRANCIS & LEWIS INTERNATIONAL LTD & MUST NOT BE USED, COPIED OR CONVEYED TO THIRD PARTIES WITHOUT THEIR PERMISSION IN WRITING. UNREGISTERED DESIGN RIGHTS APPLY, COPYRIGHT FRANCIS & LEWIS INTERNATIONAL LTD.

ALL WELDS TO BE CONTINUOUS
I.E. "PICKLE FREE"

REMOVE ALL SHARP EDGES AND BURRS

ENSURE ALL HARD STAMP CHARACTERS ARE VISIBLE AFTER GALVANISATION

UNLESS OTHERWISE STATED:-
MATERIAL:- GRADE AS PER FLI LTD MD019
FINISH:- GALVANISED TO BS EN ISO 1461
DIMENSIONS:- MILLIMETRES (mm)
WELD INSP:- AS PER NSSS LATEST EDITION ANNEX 'B'
TOLERANCES:-
CUT LENGTHS = ±2mm
HOLE CENTRES = ±2mm
ANGULAR CUT = ±0.25°
FABRICATED ASSY = ±3mm
PCD = ±1mm

FOR CE MARK & EXECUTION CLASS REFER TO RELEVANT DoP

NON PRELOADED BOLTING ASSEMBLIES TO BS EN 15048-1

NOTES:-

REV	DATE	DESCRIPTION	DRAWN	CHK'D
A	27/03/2025	FIRST ISSUE	JDG	HN

FLI structures
FRANCIS & LEWIS INTERNATIONAL LTD
TEL: +44 (0)1452 729300 WEB: www.fli.co.uk

DATE: 27/03/2025	SCALE: NTS	FLI Ref: N/A	
DRAWN / MODELLED: JDG	CHK'D: HN	ENG. APP'D: HN	
CUSTOMER: STANDARD PRODUCT			
ORDER No.: N/A			

TITLE: FLI PILE FRAME SUMMARY TABLE

ORG.No.: SK4716 Rev: A

A2

1 FOUR LEG LATTICE TOWER FRAME

4 & 8 Pile Frame to suit FLI ATS1301 and Swann CS5S

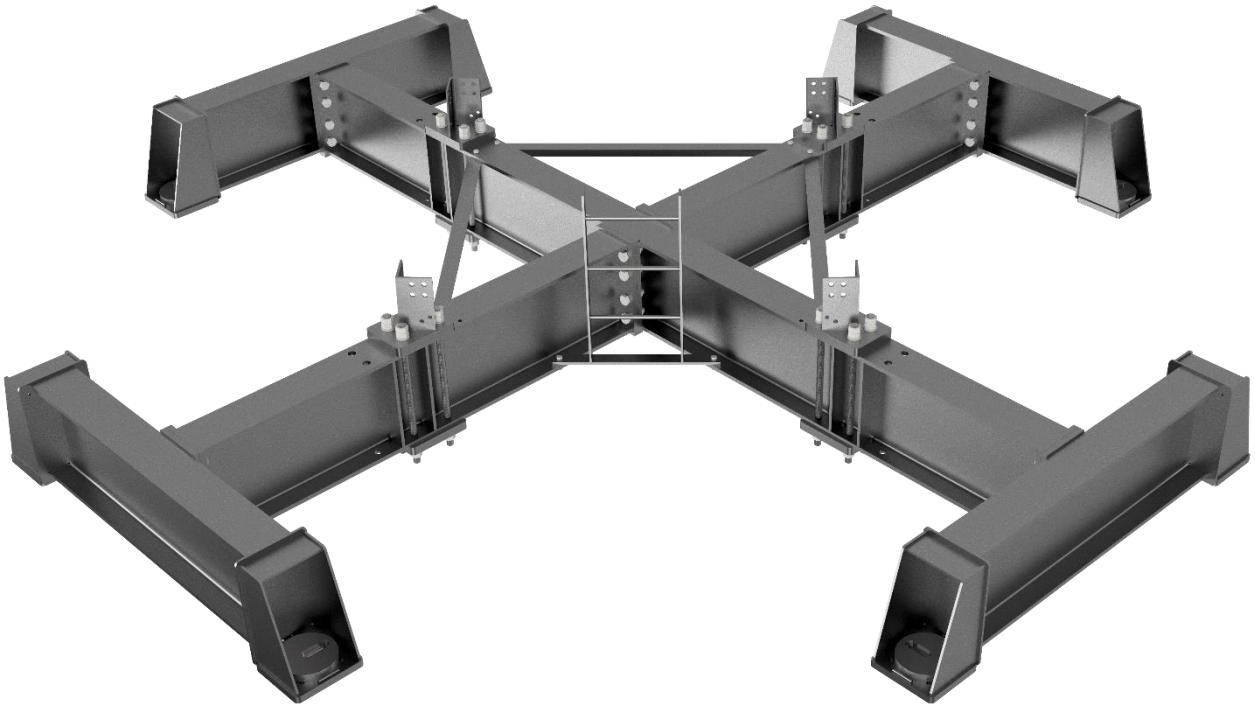

The 4 & 8 Pile Frame suits has been designed to suit a FLI ATS1301 and Swann CS5S, however the design can be used for most four-legged lattice towers with minimal modifications.

The frame shown in the image above is an 8-pile frame with a maximum PCD of 6m, however the configuration can be changed to suit specific site requirements. The number of piles used can be reduced to 4 from 8, and the PCD of the piles can be reduced to a minimum of 3.5m.

The maximum base forces used for the frame design can be seen in the table below:

Structure	OTM	Lateral load	Weight
CS5S (2m FW)	1800 kNm	90 kN	85 kN
ATS1301 Base Module E (2.3m FW)	2050 kNm	115 kN	75 kN

For further information please contact FLI.

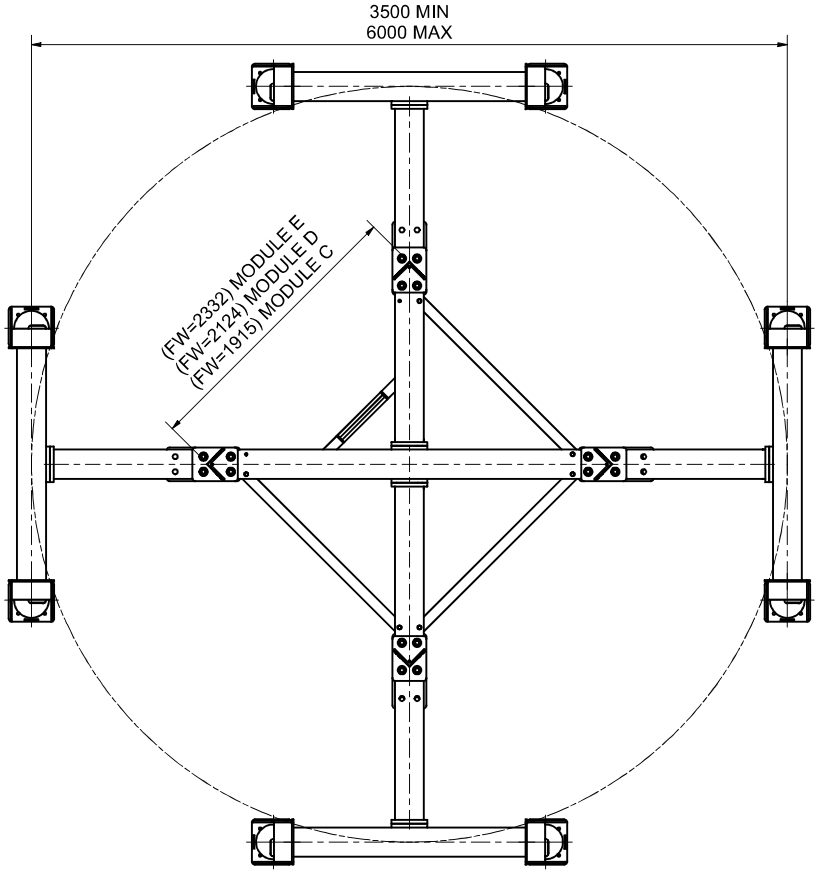

PLAN

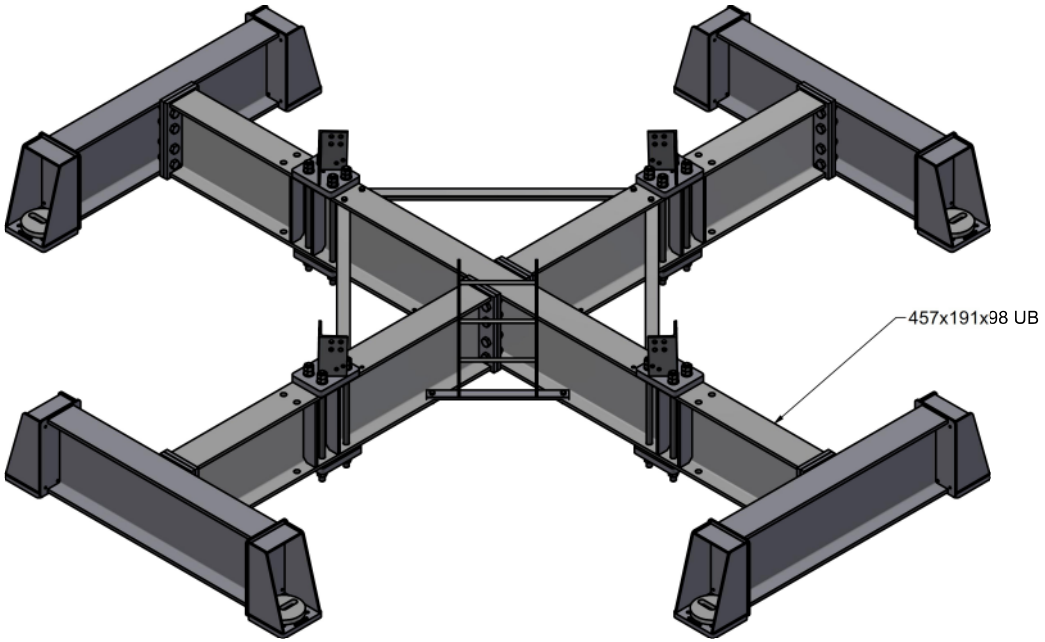

3D VIEW

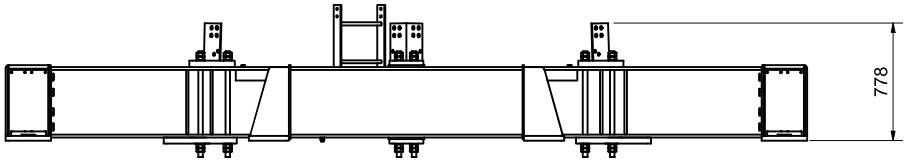

ELEVATION

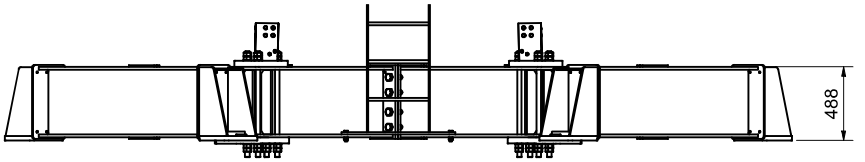

ELEVATION

ORIGINAL FRAME NUMBER	COMPATIBLE TOWER TYPES	FRAME CAPACITY			FRAME WEIGHT	FRAME PCD	MAXIMUM DEFLECTION
		OTM	SHEAR	WEIGHT			
HPF198	ATS1301 BASE MODULES C, D, AND E	2050 kNm	115 kN	75 kN	3350 kg	MIN 3.5 m MAX 6 m	0.15°

DO NOT SCALE IF IN DOUBT ASK

THE COPYRIGHT OF DESIGNS, DETAILS AND PROPOSALS CONTAINED OR IMPLIED IN THIS DRAWING ARE VESTED IN FRANCIS & LEWIS INTERNATIONAL LTD & MUST NOT BE USED, COPIED OR CONVEYED TO THIRD PARTIES WITHOUT THEIR PERMISSION IN WRITING. UNREGISTERED DESIGN RIGHTS APPLY, COPYRIGHT FRANCIS & LEWIS INTERNATIONAL LTD.

ALL WELDS TO BE CONTINUOUS I.E- "PICKLE FREE"

REMOVE ALL SHARP EDGES AND BURRS

ENSURE ALL HARD STAMP CHARACTERS ARE VISIBLE AFTER GALVANISATION

UNLESS OTHERWISE STATED:-
MATERIAL:- GRADE AS PER FLI LTD MD019
FINISH:- GALVANISED TO BS EN ISO 1461
DIMENSIONS:- MILLIMETRES (mm)
WELD INSP:- AS PER NSSS LATEST EDITION ANNEX 'B'
TOLERANCES:-
CUT LENGTHS = ±2mm
HOLE CENTRES = ±2mm
ANGULAR CUT = ±0.25°
FABRICATED ASSY = ±3mm
PCD = ±1mm

FOR CE MARK & EXECUTION CLASS REFER TO RELEVANT DoP

NON PRELOADED BOLTING ASSEMBLIES TO BS EN 15048-1

NOTES:-

ISS.	DATE	MODIFICATION	DRN	CHK
A	28/01/2025	FIRST ISSUE	JDG	HN

FLI structures
FRANCIS & LEWIS INTERNATIONAL LTD
TEL: +44 (0)1452 723200 WEB: www.fli.co.uk

DATE	27/03/2025	SCALE	NTS	FLI Ref	N/A
DRAWN / MODELLED	JDG	CHKD. CHECK	HN	ENGG. APPTD	HN

CUSTOMER: STANDARD PRODUCT

ORDER No.: N/A

TITLE: GENERIC PILE FRAME TO SUIT ATS1301 BASE MODULES C, D, & E

TOTAL WEIGHT	N/A	ORG.No.	SK4737	Rev.	A

A2

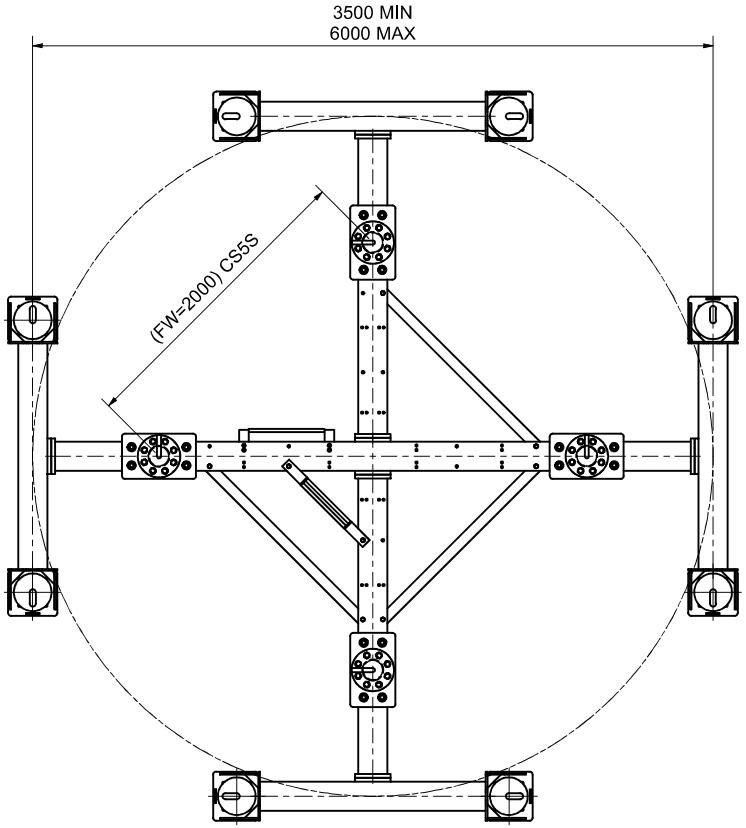

PLAN

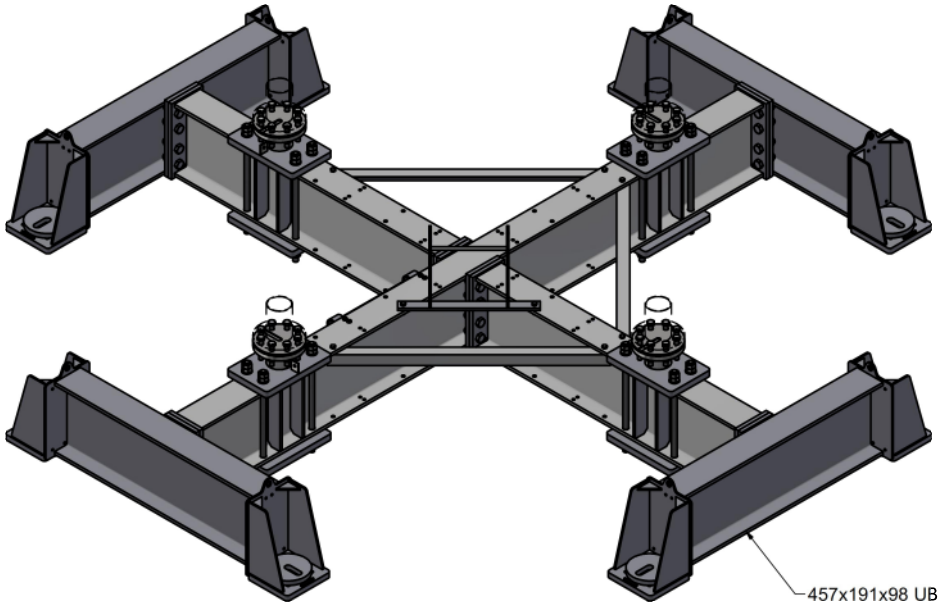

3D VIEW

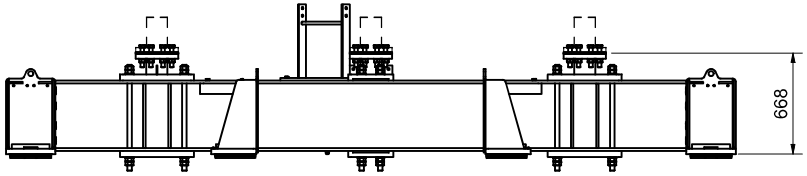

ELEVATION

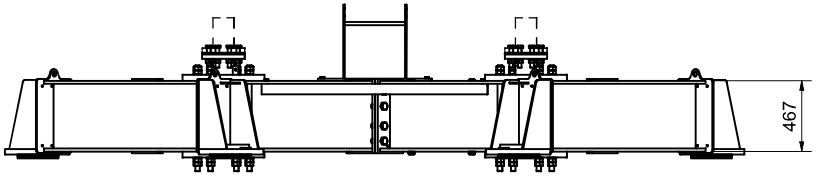

ELEVATION

ORIGINAL FRAME NUMBER	COMPATIBLE TOWER TYPES	FRAME CAPACITY			FRAME WEIGHT	FRAME PCD	MAXIMUM DEFLECTION
		OTM	SHEAR	WEIGHT			
HPF270	4 LEGGED LATTICE TOWERS INCL. 30m CS5S	1800 kNm	90 kN	85 kN	3350 kg	MIN 3.5 m MAX 6 m	0.16°

DO NOT SCALE
IF IN DOUBT ASK

THE COPYRIGHT OF DESIGNS, DETAILS AND PROPOSALS CONTAINED OR IMPLIED IN THIS DRAWING ARE VESTED IN FRANCIS & LEWIS INTERNATIONAL LTD & MUST NOT BE USED, COPIED OR CONVEYED TO THIRD PARTIES WITHOUT THEIR PERMISSION IN WRITING. UNREGISTERED DESIGN RIGHTS APPLY, COPYRIGHT FRANCIS & LEWIS INTERNATIONAL LTD.

ALL WELDS TO BE CONTINUOUS
I.E- "PICKLE FREE"

REMOVE ALL SHARP EDGES AND BURRS

ENSURE ALL HARD STAMP CHARACTERS ARE VISIBLE AFTER GALVANISATION

UNLESS OTHERWISE STATED:-
MATERIAL:- GRADE AS PER FLI LTD MD019
FINISH:- GALVANISED TO BS EN ISO 1461
DIMENSIONS:- MILLIMETRES (mm)
WELD INSP:- AS PER NSSS LATEST EDITION ANNEX 'B'
TOLERANCES:-
CUT LENGTHS = ±2mm
HOLE CENTRES = ±2mm
ANGULAR CUT = ±0.25°
FABRICATED ASSY = ±3mm
PCD = ±1mm

FOR CE MARK & EXECUTION CLASS REFER TO RELEVANT DoP

NON PRELOADED BOLTING ASSEMBLIES TO BS EN 15048-1

NOTES:-

ISS	DATE	MODIFICATION	DRN	CHK
A	28/01/2025	FIRST ISSUE	JDG	HN

FLI structures
FRANCIS & LEWIS INTERNATIONAL LTD
TEL: +44 (0)1452 723200 WEB: www.fli.co.uk

DATE	10/04/2025	SCALE	NTS	FLI Ref	N/A
DRAWN / MODELLED	JDG	CHK'D CHECK	HN	ENG. APP'D	HN
CUSTOMER	STANDARD PRODUCT				
ORDER No.	N/A				

TITLE: GENERIC PILE FRAME TO SUIT 4 LEG LATTICE TOWER

A2

TOTAL WEIGHT N/A

ORG.No. SK4738

Rev. A

2 STREETWORKS MONOPOLE FRAME

2.1 Four Pile Frame *(2000/201)*

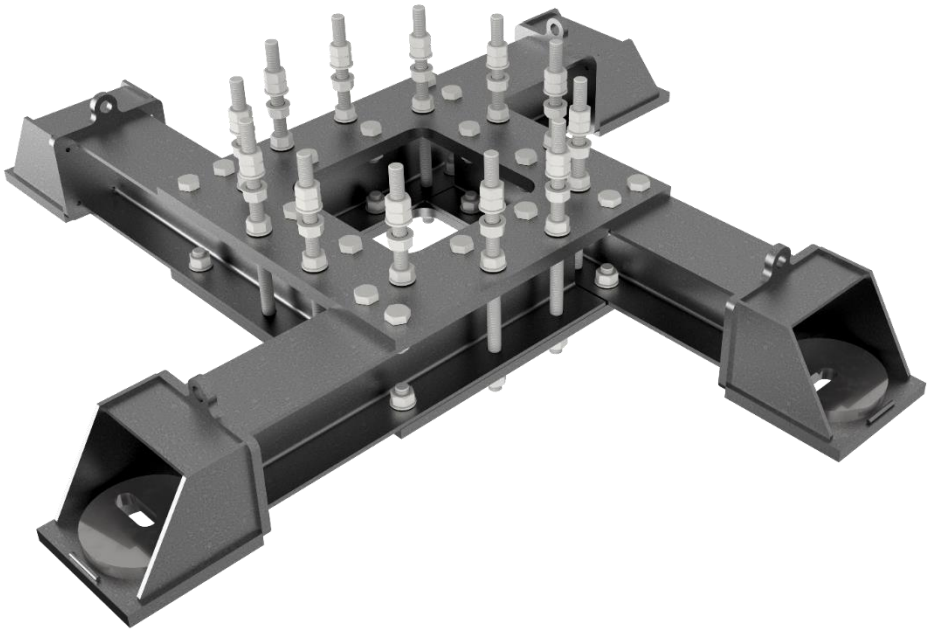

The Four Pile Streetworks Frame has been designed to suit a range of monopoles which are listed below:

- 20m Orion
- 20m Apollo
- 20m Atlas
- M-Range

All of the monopoles listed above have a Holding Down Bolt Arrangement of 12 x M30 on a 750mm PCD.

The frame can be adapted to suit specific site requirements with a maximum pile PCD of 2.8m and a minimum pile PCD of 2m.

The maximum base forces used for the frame design can be seen in the table below:

Structure	OTM	Lateral load	Weight
20m Orion, 20m Apollo, 20m Atlas, M-Range	215 kNm	16 kN	37 kN

For further information please contact FLI.

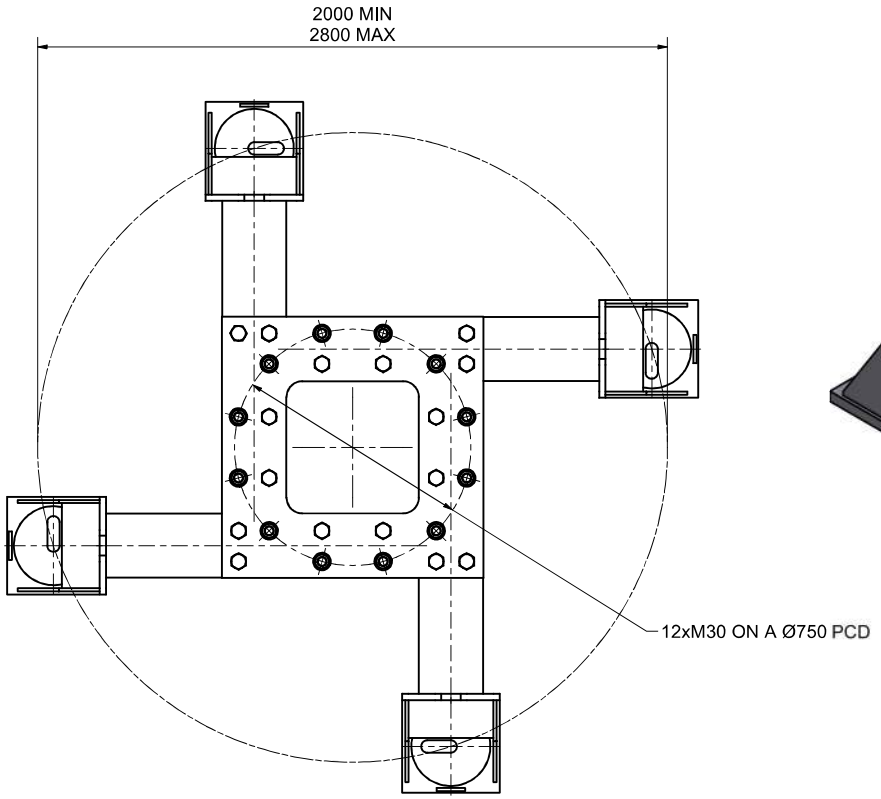

PLAN

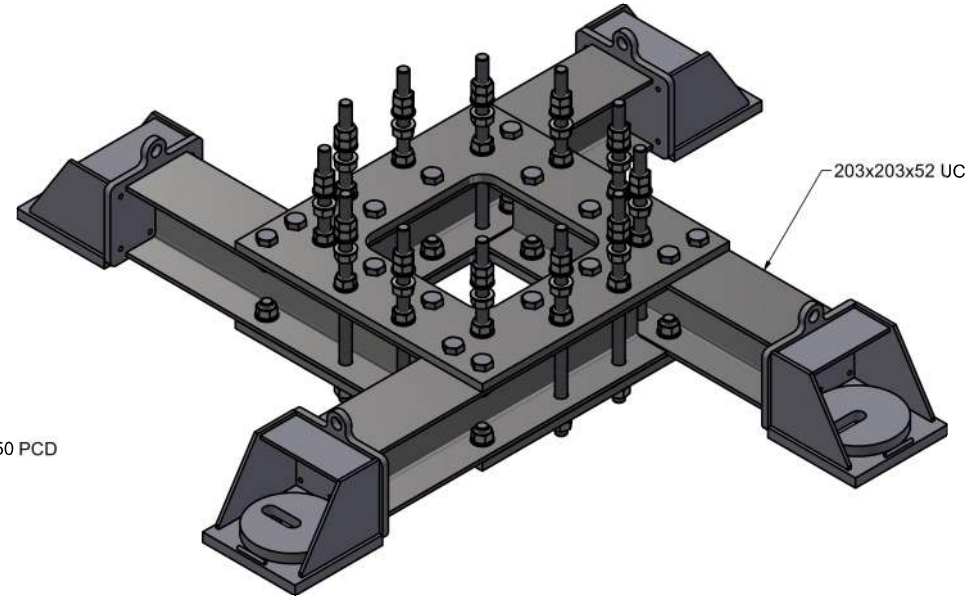

3D VIEW

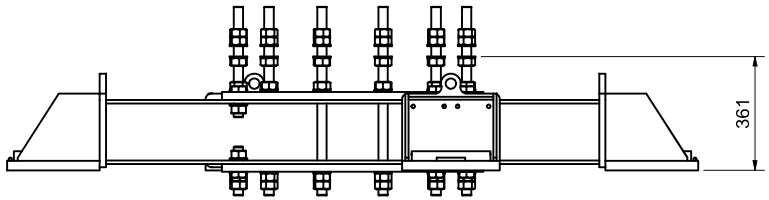

ELEVATION

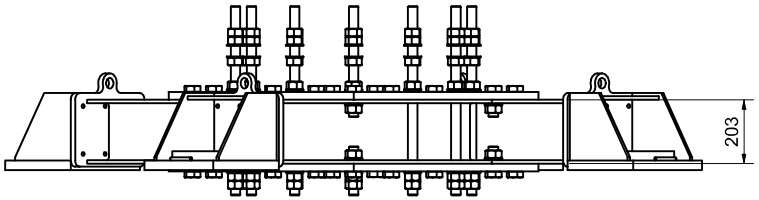

ELEVATION

ORIGINAL FRAME NUMBER	COMPATIBLE TOWER TYPES	FRAME CAPACITY			FRAME WEIGHT	FRAME PCD	MAXIMUM DEFLECTION
		OTM	SHEAR	WEIGHT			
HPF262	20m ORION MONOPOLE, 20m APOLLO MONOPOLE, 20m ATLAS MONOPOLE, M-RANGE MONOPOLE	215 kNm	16 kN	37 kN	680 kg	MIN 2 m MAX 2.8 m	0.22°

DO NOT SCALE IF IN DOUBT ASK

THE COPYRIGHT OF DESIGNS, DETAILS AND PROPOSALS CONTAINED OR IMPLIED IN THIS DRAWING ARE VESTED IN FRANCIS & LEWIS INTERNATIONAL LTD & MUST NOT BE USED, COPIED OR CONVEYED TO THIRD PARTIES WITHOUT THEIR PERMISSION IN WRITING. UNREGISTERED DESIGN RIGHTS APPLY, COPYRIGHT FRANCIS & LEWIS INTERNATIONAL LTD.

ALL WELDS TO BE CONTINUOUS I.E- "PICKLE FREE"

REMOVE ALL SHARP EDGES AND BURRS

ENSURE ALL HARD STAMP CHARACTERS ARE VISIBLE AFTER GALVANISATION

UNLESS OTHERWISE STATED:-
MATERIAL:- GRADE AS PER FLI LTD MD019
FINISH:- GALVANISED TO BS EN ISO 1461
DIMENSIONS:- MILLIMETRES (mm)
WELD INSP:- AS PER NSSS LATEST EDITION ANNEX 'B'
TOLERANCES:-
CUT LENGTHS = ±2mm
HOLE CENTRES = ±2mm
ANGULAR CUT = ±0.25°
FABRICATED ASSY = ±3mm
PCD = ±1mm

FOR CE MARK & EXECUTION CLASS REFER TO RELEVANT DoP

NON PRELOADED BOLTING ASSEMBLIES TO BS EN 15048-1

NOTES:-

ISS	DATE	MODIFICATION	DRWN	CHKD
A	28/01/2025	FIRST ISSUE	JDG	HN

FLI structures
FRANCIS & LEWIS INTERNATIONAL LTD
TEL: +44 (0)1452 723300 WEB: www.fli.co.uk

DATE: 10/04/2025	SCALE: NTS	FLI Ref:	N/A
DRAWN / MODELLED: JDG	CHKD. CHECK: HN	ENG. APPTD:	HN
CUSTOMER: STANDARD PRODUCT			
ORDER No.: N/A			

TITLE: 4 PILE FRAME TO SUIT 20m STREETWORKS MONOPOLE

TOTAL WEIGHT: N/A	ORG.No.: SK4739	Rev: A	

A2

2.2 Three Pile Frame

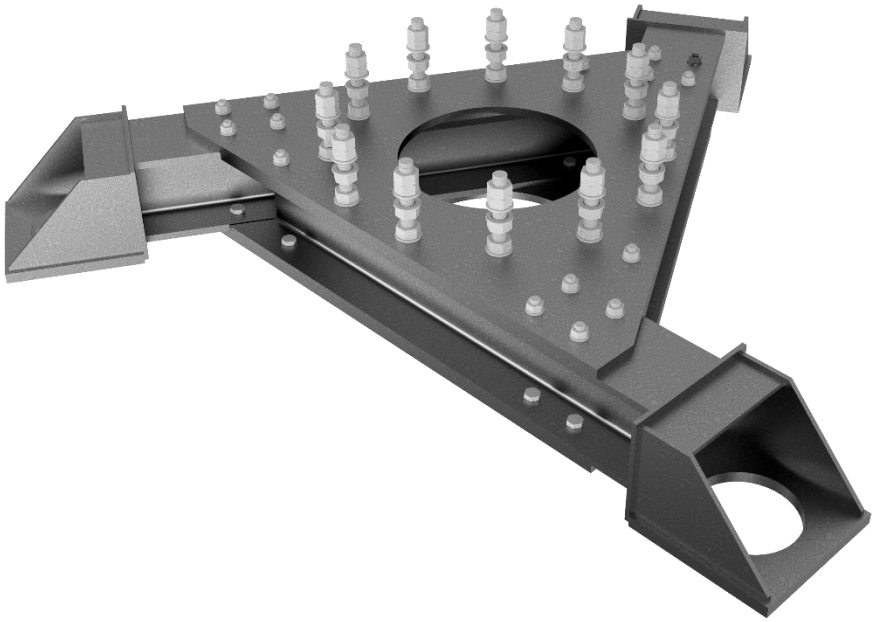

The Three Pile Streetworks Frame has been designed to suit a range of monopoles which are listed below:

- 20m Orion
- 20m Apollo
- 20m Atlas
- M-Range

All of the monopoles listed above have a Holding Down Bolt Arrangement of 12 x M30 on a 750mm PCD.

The Three Pile Streetworks Monopole Frame has been designed to support the same monopoles as the Four Pile Frame but can be used on tighter sites or sites with lower wind speeds.

The maximum base forces used for the frame design can be seen in the table below:

Structure	OTM	Lateral load	Weight
20m Orion, 20m Apollo, 20m Atlas, M-Range	100 kNm	8 kN	28 kN

For further information please contact FLI.

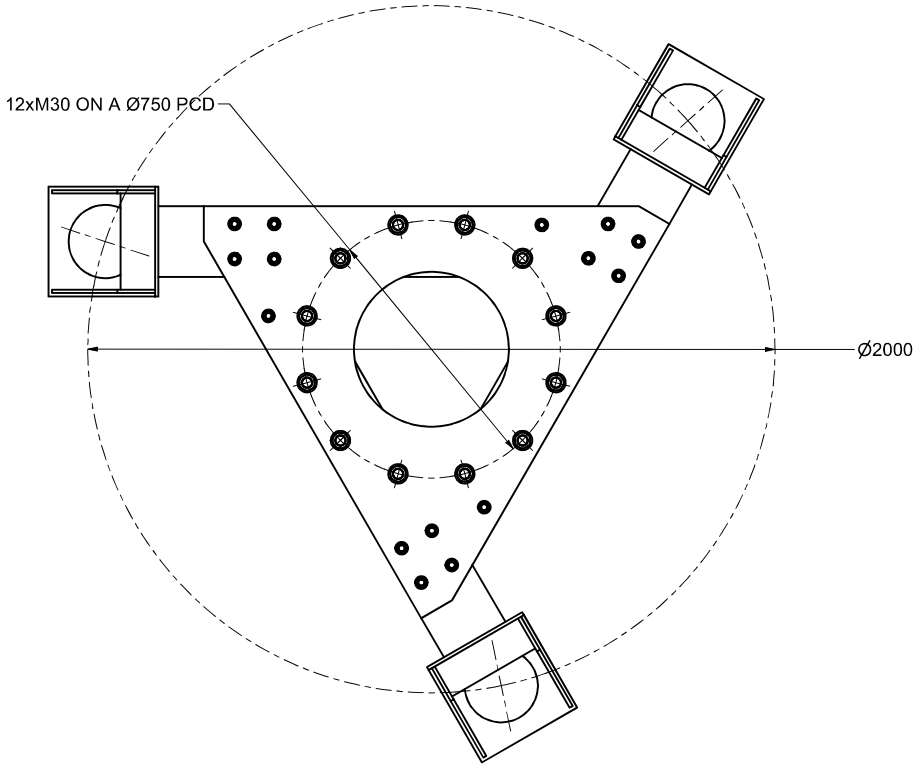

PLAN

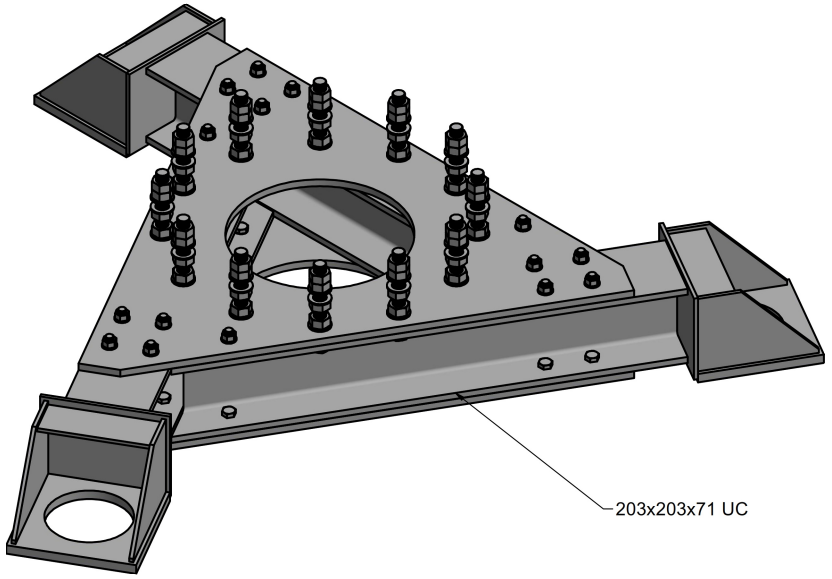

3D VIEW

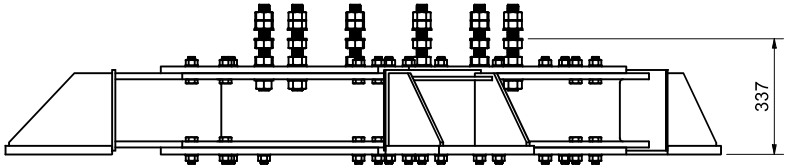

ELEVATION

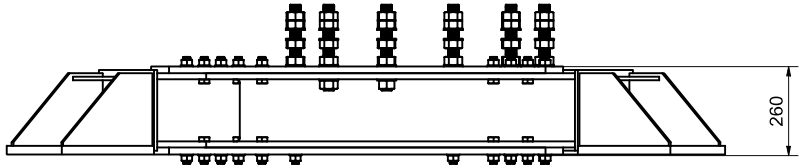

ELEVATION

ORIGINAL FRAME NUMBER	COMPATIBLE TOWER TYPES	FRAME CAPACITY			FRAME WEIGHT	MAXIMUM FRAME PCD	MAXIMUM DEFLECTION
		OTM	SHEAR	WEIGHT			
HPF226	20m ORION MONOPOLE, 20m APOLLO MONOPOLE, 20m ATLAS MONOPOLE, M-RANGE MONOPOLE	100 kNm	8 kN	28 kN	700 kg	2 m	0.16°

DO NOT SCALE
IF IN DOUBT ASK

THE COPYRIGHT OF DESIGNS, DETAILS AND PROPOSALS CONTAINED OR IMPLIED IN THIS DRAWING ARE VESTED IN FRANCIS & LEWIS INTERNATIONAL LTD & MUST NOT BE USED, COPIED OR CONVEYED TO THIRD PARTIES WITHOUT THEIR PERMISSION IN WRITING. UNREGISTERED DESIGN RIGHTS APPLY. COPYRIGHT FRANCIS & LEWIS INTERNATIONAL LTD.

ALL WELDS TO BE CONTINUOUS
I.E. "PICKLE FREE"

REMOVE ALL SHARP
EDGES AND BURRS

ENSURE ALL HARD STAMP CHARACTERS
ARE VISIBLE AFTER GALVANISATION

UNLESS OTHERWISE STATED:-
MATERIAL:- GRADE AS PER FLI LTD MD019
FINISH:- GALVANISED TO BS EN ISO 1461
DIMENSIONS:- MILLIMETRES (mm)
WELD INSP:- AS PER NSSS LATEST EDITION ANNEX 'B'
TOLERANCES:-
CUT LENGTHS = ±2mm
HOLE CENTRES = ±2mm
ANGULAR CUT = ±0.25°
FABRICATED ASSY = ±3mm
PCD = ±1mm

FOR CE MARK & EXECUTION CLASS REFER TO RELEVANT DoP

NON PRELOADED BOLTING ASSEMBLIES TO BS EN 15048-1

NOTES:-

ISSUE	DATE	MODIFICATION	DRN'N	CHK'D
A		FIRST ISSUE	JDG	--

FLI structures
FRANCIS & LEWIS INTERNATIONAL LTD
TEL: +44 (0)1462 722200 WEB: www.fli.co.uk

DATE:	10/04/2025	SCALE:	NTS	FLI Ref	N/A
DRAWN / MODIFIED	JDG	DRG. CHECK	--	ENG. APP'D	--
CUSTOMER	STANDARD PRODUCT				
ORDER No.	N/A				

TITLE
3 PILE FRAME TO SUIT
20m STREETWORKS
MONOPOLE

TOTAL WEIGHT N/A

DRG.No. SK4740 REV. A

A2

3 FLIDER

3.1 DM3 & DM4 Four Leg Frame

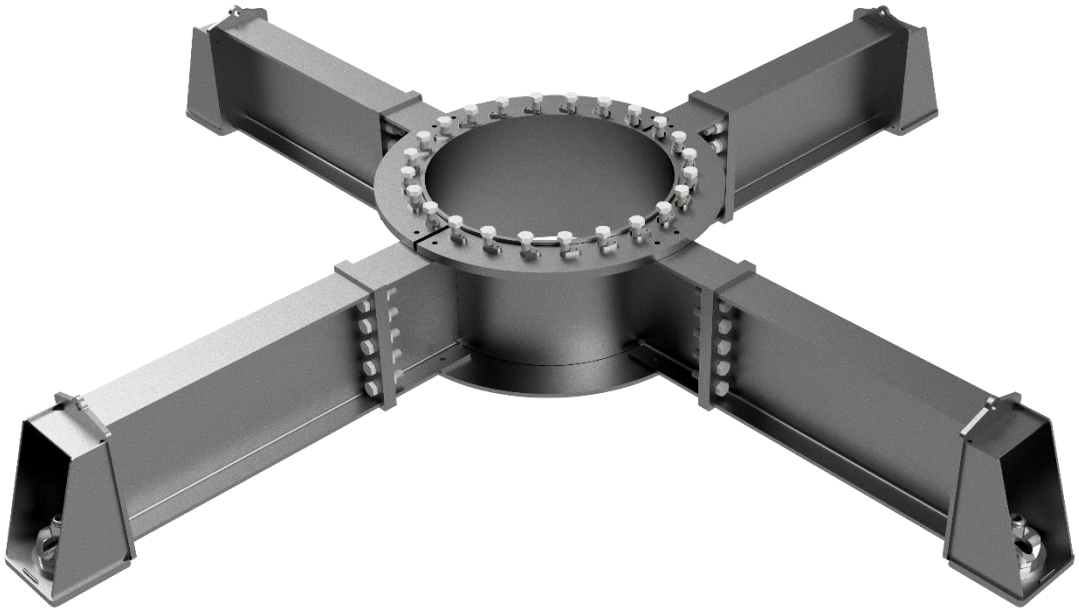

The Four Legged FLIder frame suits a 20m DM4 monopole and a 20m DM3 monopole and has been designed with a maximum PCD of 4.75m. The PCD of the frame can be adjusted by shortening the length of the arms to achieve a minimum PCD of 2.5m.

This frame will typically be used with piles.

The maximum base forces used for the frame design can be seen in the table below:

Structure	OTM	Lateral load	Weight
20m DM4 20m DM3	1000 kNm	90 kN	100 kN

For further information please contact FLI.

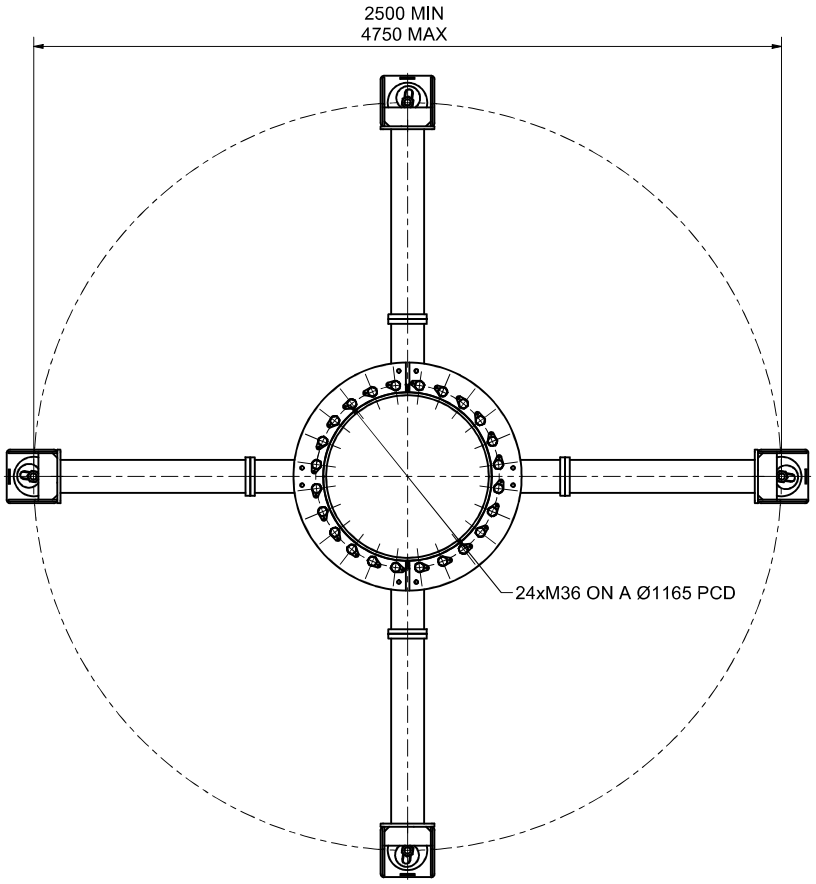

PLAN

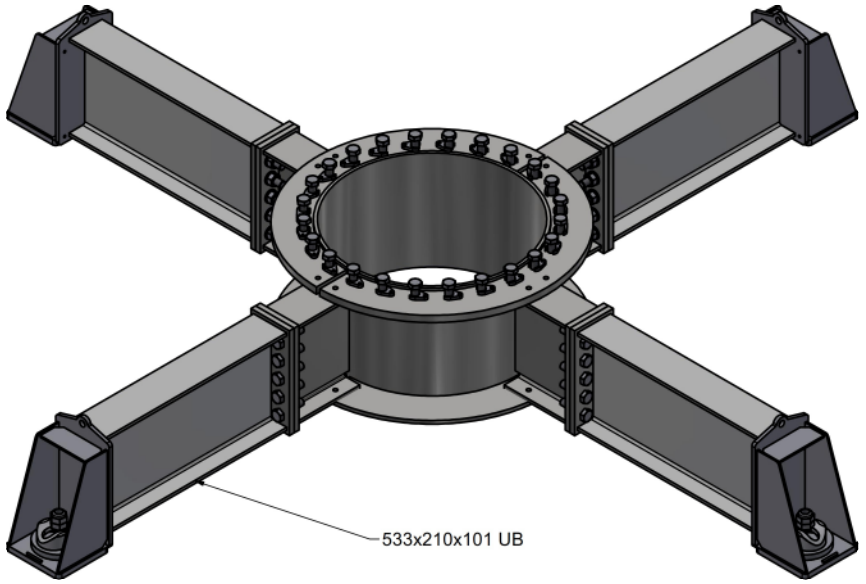

3D VIEW

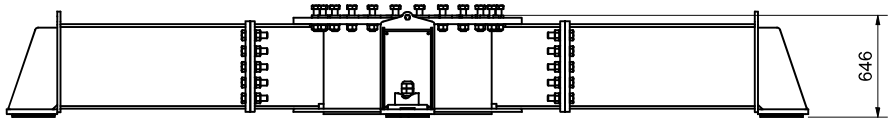

ELEVATION

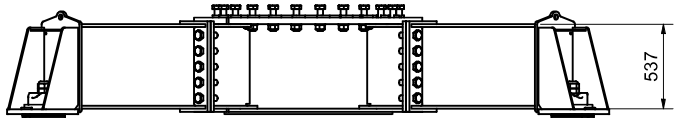

ELEVATION

ORIGINAL FRAME NUMBER	COMPATIBLE TOWER TYPES	FRAME CAPACITY			FRAME WEIGHT	FRAME PCD	MAXIMUM DEFLECTION
		OTM	SHEAR	WEIGHT			
HPF246	FLI DM4 (UP TO 20m) FLI DM3 (UP TO 20m)	1000 kNm	90 kN	100 kN	2130 kg	MIN 2.5 m MAX 4.75 m	0.15°

DO NOT SCALE
IF IN DOUBT ASK

THE COPYRIGHT OF DESIGNS, DETAILS AND PROPOSALS CONTAINED OR IMPLIED IN THIS DRAWING ARE VESTED IN FRANCIS & LEWIS INTERNATIONAL LTD & MUST NOT BE USED, COPIED OR CONVEYED TO THIRD PARTIES WITHOUT THEIR PERMISSION IN WRITING. UNREGISTERED DESIGN RIGHTS APPLY, COPYRIGHT FRANCIS & LEWIS INTERNATIONAL LTD.

ALL WELDS TO BE CONTINUOUS
I.E. "PICKLE FREE"

REMOVE ALL SHARP EDGES AND BURRS

ENSURE ALL HARD STAMP CHARACTERS ARE VISIBLE AFTER GALVANISATION

UNLESS OTHERWISE STATED:-
MATERIAL:- GRADE AS PER FLI LTD MD019
FINISH:- GALVANISED TO BS EN ISO 1461
DIMENSIONS:- MILLIMETRES (mm)
WELD INSP:- AS PER NSSS LATEST EDITION ANNEX 'B'
TOLERANCES:-
CUT LENGTHS = ±2mm
HOLE CENTRES = ±2mm
ANGULAR CUT = ±0.25°
FABRICATED ASSY = ±3mm
PCD = ±1mm

FOR CE MARK & EXECUTION CLASS REFER TO RELEVANT DoP

NON PRELOADED BOLTING ASSEMBLIES TO BS EN 15048-1

NOTES:-

ISS	DATE	MODIFICATION	DRN	CHK
A	28/01/2025	FIRST ISSUE	JDG	HN

FLI structures
FRANCIS & LEWIS INTERNATIONAL LTD
TEL: +44 (0)1452 723300 WEB: www.fli.co.uk

DATE	10/04/2025	SCALE	NTS	FLI Ref	N/A
DRAWN / MODELLED	JDG	CHKD. CHECK	HN	ENG. APPTD	HN

CUSTOMER: STANDARD PRODUCT

ORDER No.: N/A

TITLE: 4 PILE FRAME TO SUIT FLI DM3 & DM4

TOTAL WEIGHT: N/A

ORG.No.: SK4741

Rev.: A

A2

3.2 DM3 & DM4 Eight Leg Frame

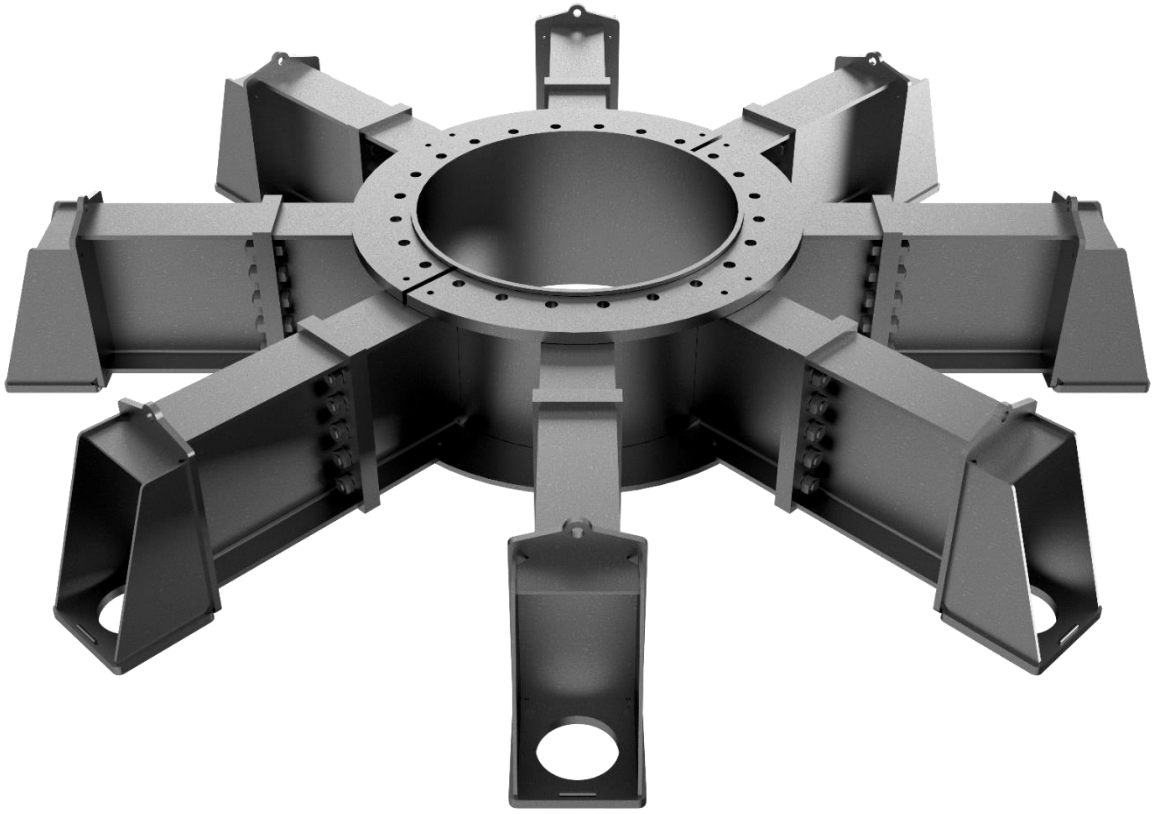

The Eight Legged FLIder Frame suits a 20m DM4 monopole and a 20m DM3 monopole and has been designed with a maximum PCD of 6m. The PCD of the frame can be adjusted by shortening the length of the arms to achieve a minimum PCD of 2.5m.

This frame will typically be used with piled foundations in poor ground conditions, or with Hilti/Fischer chemical anchors in an existing concrete foundation.

The maximum base forces used for the frame design can be seen in the table below:

Structure	OTM	Lateral load	Weight
20m DM4 20m DM3	1250 kNm	90 kN	100 kN

For further information please contact FLI.

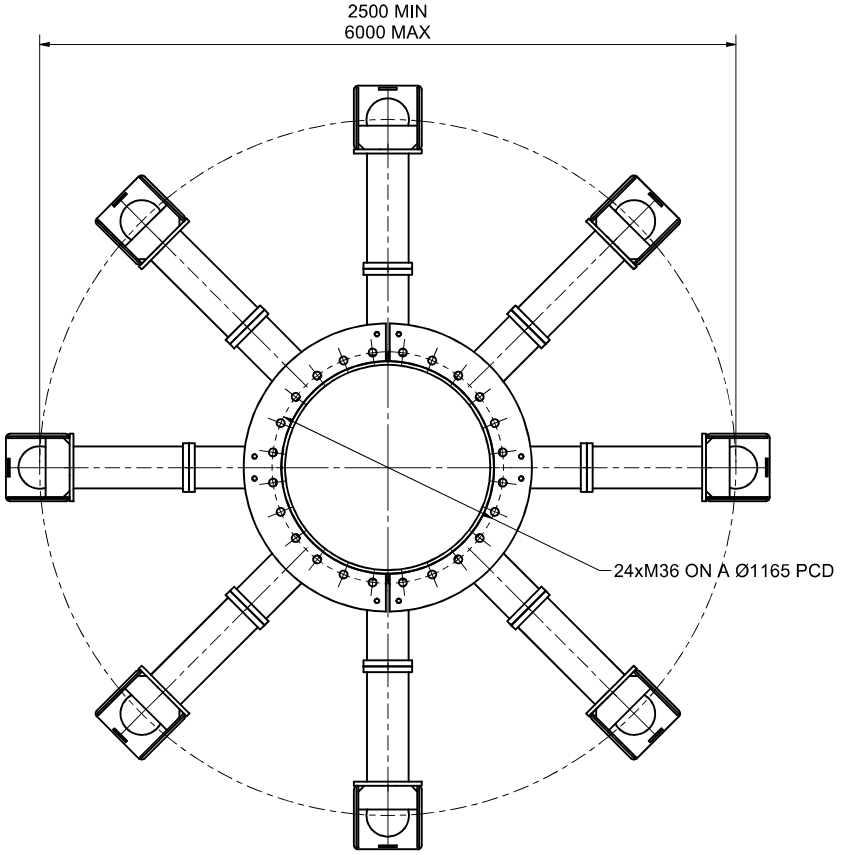

PLAN

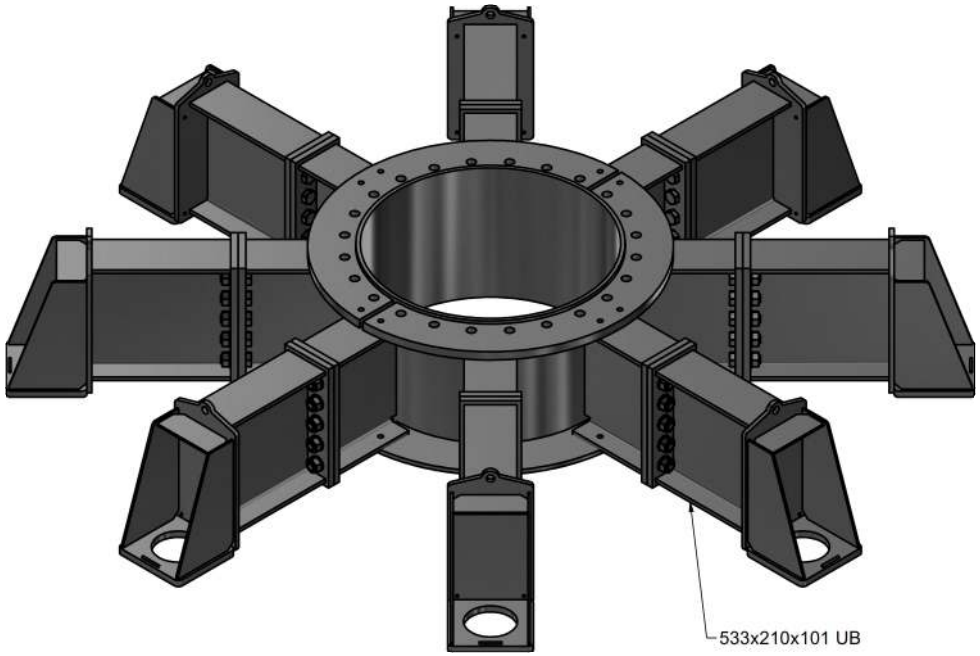

3D VIEW

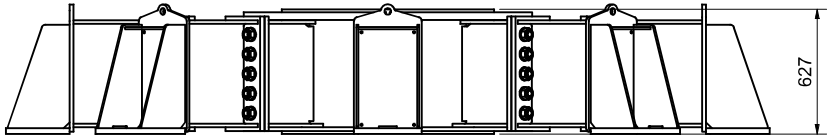

ELEVATION

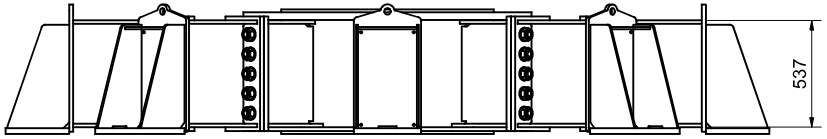

ELEVATION

ORIGINAL FRAME NUMBER	COMPATIBLE TOWER TYPES	FRAME CAPACITY			FRAME WEIGHT	FRAME PCD	MAXIMUM DEFLECTION
		OTM	SHEAR	WEIGHT			
HPF283	FLI DM4 (UP TO 20m), FLI DM3 (UP TO 20m)	1250 kNm	90 kN	100 kN	3350 kg	MIN 2.5 m MAX 6 m	0.15°

DO NOT SCALE
IF IN DOUBT ASK

THE COPYRIGHT OF DESIGNS, DETAILS AND PROPOSALS CONTAINED OR IMPLIED IN THIS DRAWING ARE VESTED IN FRANCIS & LEWIS INTERNATIONAL LTD & MUST NOT BE USED, COPIED OR CONVEYED TO THIRD PARTIES WITHOUT THEIR PERMISSION IN WRITING. UNREGISTERED DESIGN RIGHTS APPLY, COPYRIGHT FRANCIS & LEWIS INTERNATIONAL LTD.

ALL WELDS TO BE CONTINUOUS
I.E- "PICKLE FREE"

REMOVE ALL SHARP EDGES AND BURRS

ENSURE ALL HARD STAMP CHARACTERS ARE VISIBLE AFTER GALVANISATION

UNLESS OTHERWISE STATED:-
MATERIAL:- GRADE AS PER FLI LTD MD019
FINISH:- GALVANISED TO BS EN ISO 1461
DIMENSIONS:- MILLIMETRES (mm)
WELD INSP:- AS PER NSSS LATEST EDITION ANNEX 'B'
TOLERANCES:-
CUT LENGTHS = ±2mm
HOLE CENTRES = ±2mm
ANGULAR CUT = ±0.25°
FABRICATED ASSY = ±3mm
PCD = ±1mm

FOR CE MARK & EXECUTION CLASS REFER TO RELEVANT DoP

NON PRELOADED BOLTING ASSEMBLIES TO BS EN 15048-1

NOTES:-

ISS	DATE	MODIFICATION	DRN	CHK
A	28/01/2025	FIRST ISSUE	JDG	HN

FLI structures
FRANCIS & LEWIS INTERNATIONAL LTD
TEL: +44 (0)1452 723000 WEB: www.fli.co.uk

DATE	11/04/2025	SCALE	NTS	FLI Ref	N/A
DRAWN / MODELLED	JDG	CHK'D CHECK	HN	ENG. APP'D	HN
CUSTOMER	STANDARD PRODUCT				
ORDER No.	N/A				

TITLE
8 PILE FRAME TO SUIT FLI DM3 & DM4

A2

TOTAL WEIGHT N/A ORG.No. SK4742 Rev. A

4 RAIL FRAME

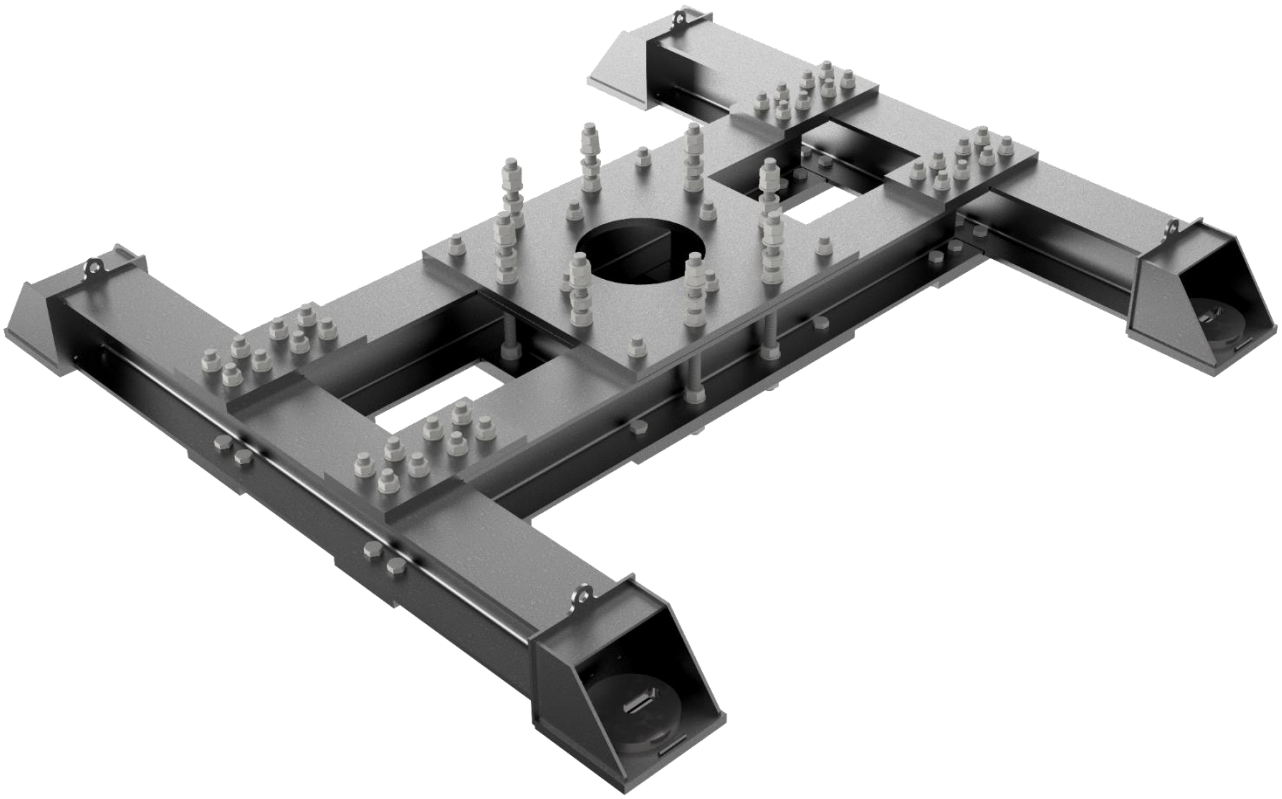

The FLI Rail Frame is used in conjunction with FLI cantilever signal gantries. The frame is supported by four piles with 2.5m centres.



For further information about the frame and signal gantry please contact FLI.

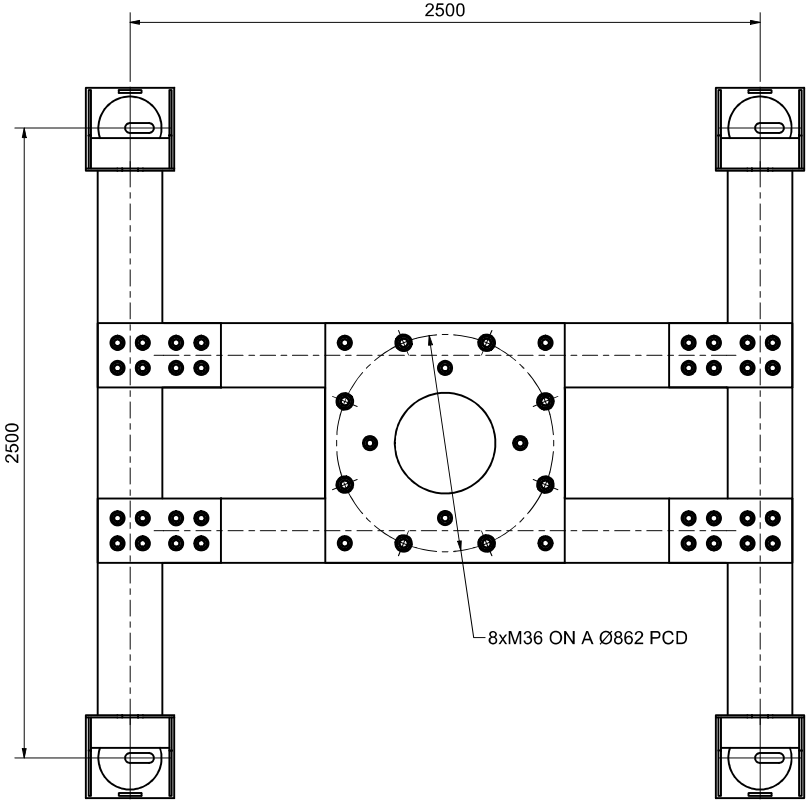

PLAN

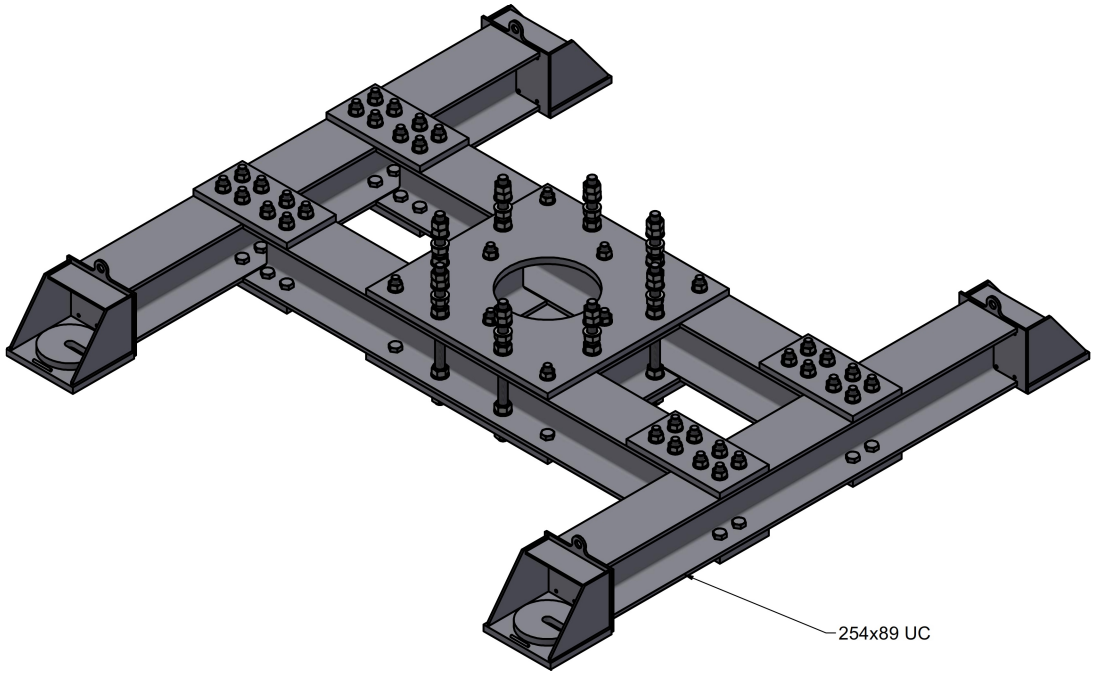

3D VIEW

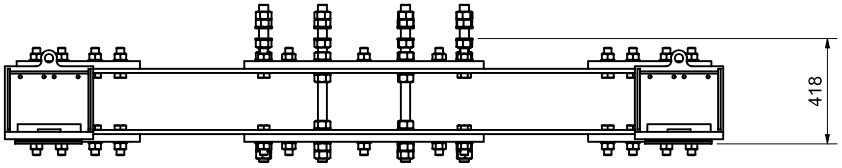

ELEVATION

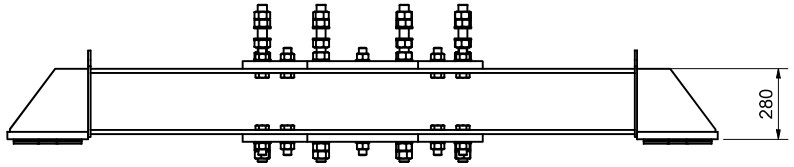

ELEVATION

ORIGINAL FRAME NUMBER	COMPATIBLE TOWER TYPES	FRAME CAPACITY			FRAME WEIGHT	FRAME CENTRES	MAXIMUM DEFLECTION
		OTM	SHEAR	WEIGHT			
HPF267	FLI RAIL GANTRY	TBC	TBC	TBC	1920 kg	2.5 m	N/A

DO NOT SCALE
IF IN DOUBT ASK

THE COPYRIGHT OF DESIGNS, DETAILS AND PROPOSALS CONTAINED OR IMPLIED IN THIS DRAWING ARE VESTED IN FRANCIS & LEWIS INTERNATIONAL LTD & MUST NOT BE USED, COPIED OR CONVEYED TO THIRD PARTIES WITHOUT THEIR PERMISSION IN WRITING. UNREGISTERED DESIGN RIGHTS APPLY, COPYRIGHT FRANCIS & LEWIS INTERNATIONAL LTD.

ALL WELDS TO BE CONTINUOUS I.E. "PICKLE FREE"

REMOVE ALL SHARP EDGES AND BURRS

ENSURE ALL HARD STAMP CHARACTERS ARE VISIBLE AFTER GALVANISATION

UNLESS OTHERWISE STATED:-
MATERIAL:- GRADE AS PER FLI LTD MD019
FINISH:- GALVANISED TO BS EN ISO 1461
DIMENSIONS:- MILLIMETRES (mm)
WELD INSP:- AS PER NSSS LATEST EDITION ANNEX 'B'
TOLERANCES:-
CUT LENGTHS = ±2mm
HOLE CENTRES = ±2mm
ANGULAR CUT = ±0.25°
FABRICATED ASSY = ±3mm
PCD = ±1mm

FOR CE MARK & EXECUTION CLASS REFER TO RELEVANT DoP

NON PRELOADED BOLTING ASSEMBLIES TO BS EN 15048-1

NOTES:-

ISSUE	DATE	MODIFICATION	DRAWN
A		FIRST ISSUE	JDG –

FLI structures
FRANCIS & LEWIS INTERNATIONAL LTD
TEL: +44 (0)1452 722200 WEB: www.fli.co.uk

DATE:	11/04/2025	SCALE:	NTS	TI Ref	N/A
DRAWN / MODIFIED:	JDG	CHKD. CHECK	--	ENGR. APP'D	--
CUSTOMER:	STANDARD PRODUCT				
ORDER No.	N/A				

TITLE
4 PILE FRAME TO SUIT CANTILEVER GANTRY

TOTAL WEIGHT	N/A	DRG.No.	SK4743	REV.	A

A2

5 FLICORN - T3A MICROPILE FRAME

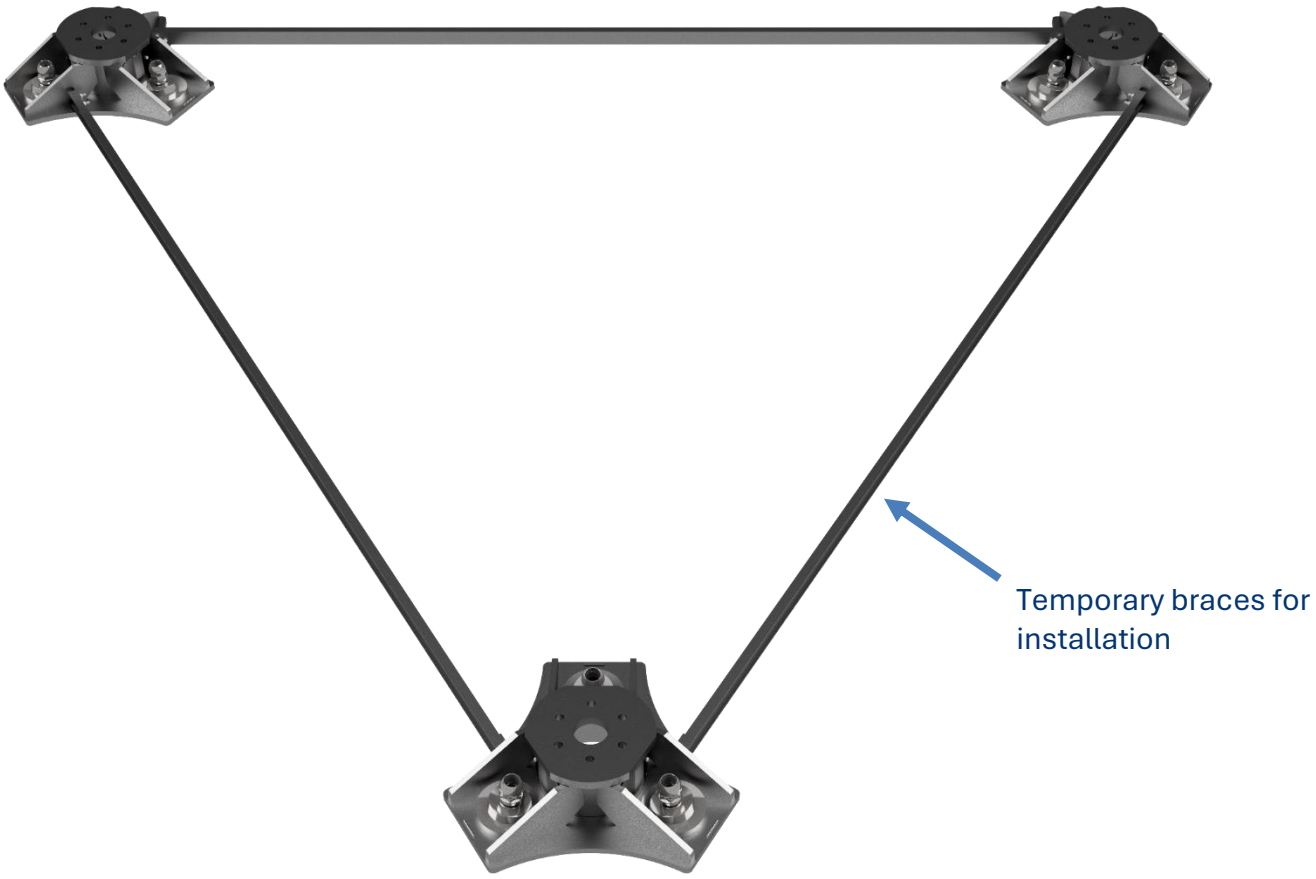

The FLIcorn has been designed to suit a T3A lattice tower and should be used with Micropiles.

The maximum base leg forces used for the frame design can be seen in the table below:

Structure	Tension	Compression	Shear
40m T3A	2100 kN	2200 kN	270 kN

For further information please contact FLI.

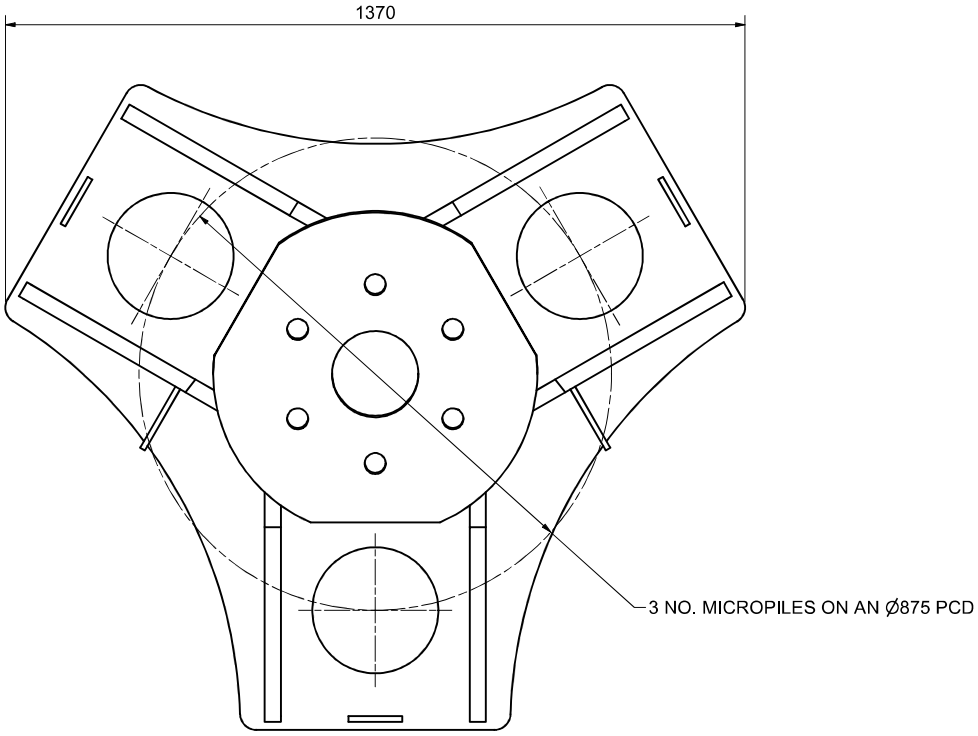

PLAN

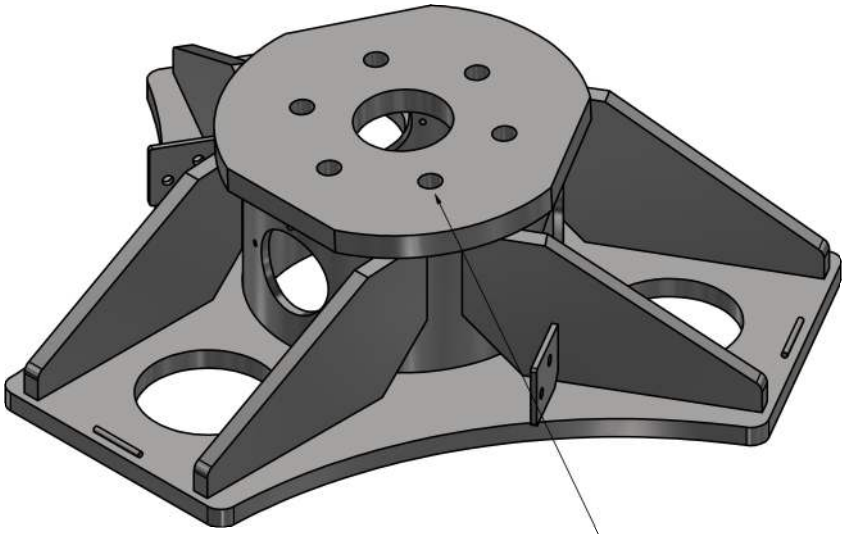

3D VIEW

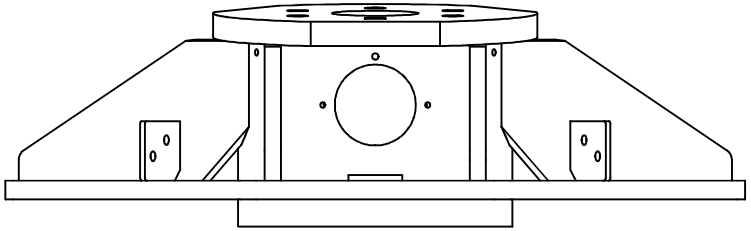

ELEVATION

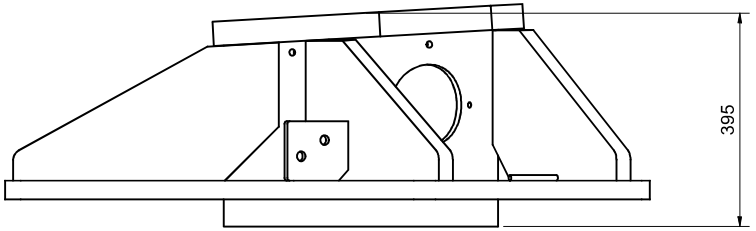

ELEVATION

ORIGINAL FRAME NUMBER	COMPATIBLE TOWER TYPES	FRAME CAPACITY			FRAME WEIGHT	MAXIMUM DEFLECTION
		TENSION	COMPRESSION	SHEAR		
HPF243	FLI T3A (UP TO 40m)	2100 kN	2200 kN	270 kN	2160 kg	N/A

DO NOT SCALE
IF IN DOUBT ASK

THE COPYRIGHT OF DESIGNS, DETAILS AND PROPOSALS CONTAINED OR IMPLIED IN THIS DRAWING ARE VESTED IN FRANCIS & LEWIS INTERNATIONAL LTD & MUST NOT BE USED, COPIED OR CONVEYED TO THIRD PARTIES WITHOUT THEIR PERMISSION IN WRITING. UNREGISTERED DESIGN RIGHTS APPLY, COPYRIGHT FRANCIS & LEWIS INTERNATIONAL LTD.

ALL WELDS TO BE CONTINUOUS
I.E- "PICKLE FREE"

REMOVE ALL SHARP EDGES AND BURRS

ENSURE ALL HARD STAMP CHARACTERS ARE VISIBLE AFTER GALVANISATION

UNLESS OTHERWISE STATED:-
MATERIAL:- GRADE AS PER FLI LTD MD019
FINISH:- GALVANISED TO BS EN ISO 1461
DIMENSIONS:- MILLIMETRES (mm)
WELD INSP:- AS PER NSSS LATEST EDITION ANNEX 'B'
TOLERANCES:-
CUT LENGTHS = ±2mm
HOLE CENTRES = ±2mm
ANGULAR CUT = ±0.25°
FABRICATED ASSY = ±3mm
PCD = ±1mm

FOR CE MARK & EXECUTION CLASS REFER TO RELEVANT DoP

NON PRELOADED BOLTING ASSEMBLIES TO BS EN 15048-1

NOTES:-

ISS.	DATE	MODIFICATION	DRN	CHK
A		FIRST ISSUE	JDG	-

FLI structures
FRANCIS & LEWIS INTERNATIONAL LTD
TEL: +44 (0)1452 723000 WEB: www.fli.co.uk

DATE	28/04/2025	SCALE	NTS	FLI Ref	N/A
DRAWN / MODELLED	JDG	ORIG. CHECK	--	ENG. APP'D	--
CUSTOMER	STANDARD PRODUCT				
ORDER No.	N/A				

TITLE: GENERIC MICROPILE FRAME TO SUIT FLI T3A

TOTAL WEIGHT 479.4 kg | ORG.No. SK4744 | Rev. A

A2